MODEL STAV-3170 DIGITAL SYNTHESIZED AUDIO/VIDEO SURROUND RECEIVER
SHEET # 1 (31-3023)
FAXBACK DOC # 10148

CONTINUED ON SHEET # 2

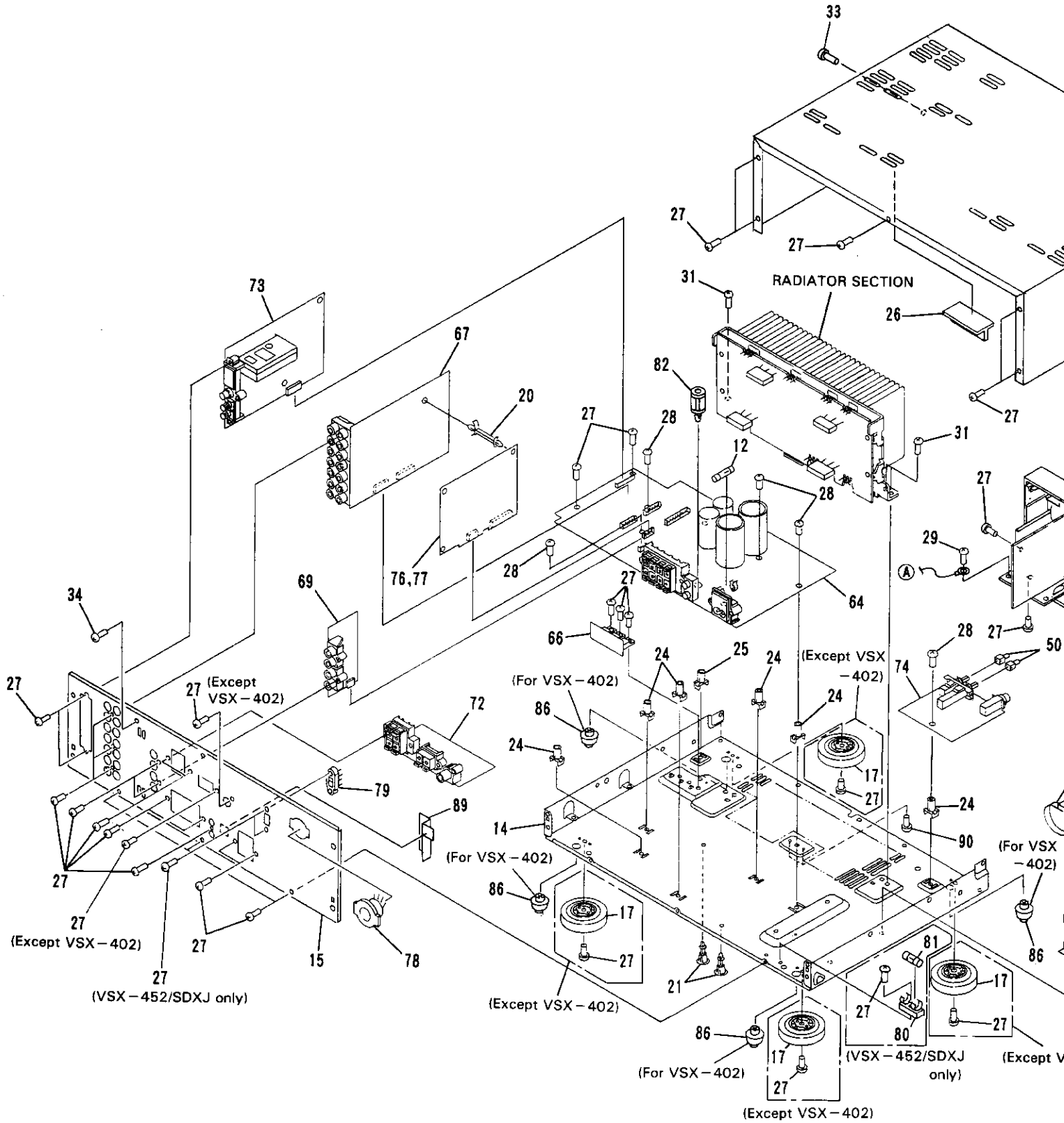

MODEL STAV-3170 DIGITAL SYNTHESIZED AUDIO/VEDIO SURROUND RECEIVER
SHEET # 2 (31-3023)
FAXBACK DOC # 10148

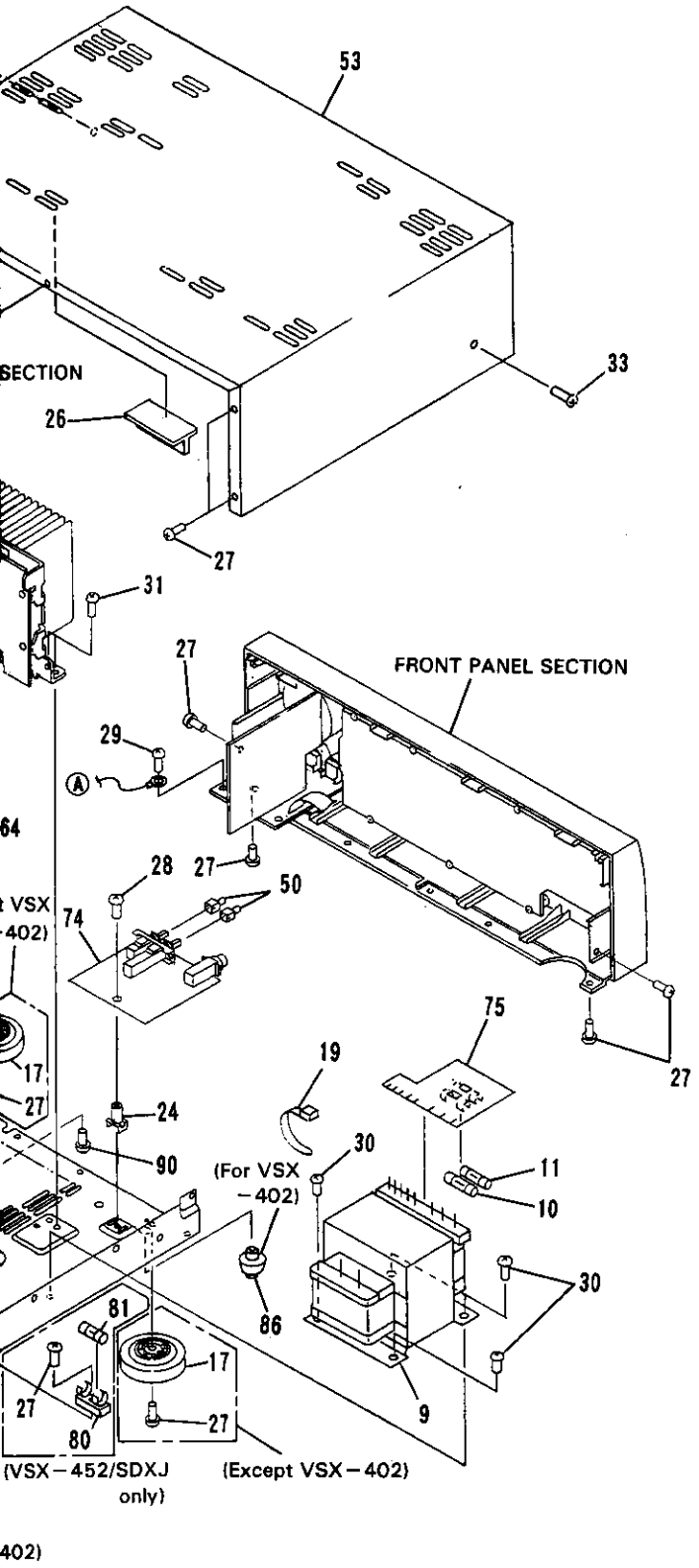

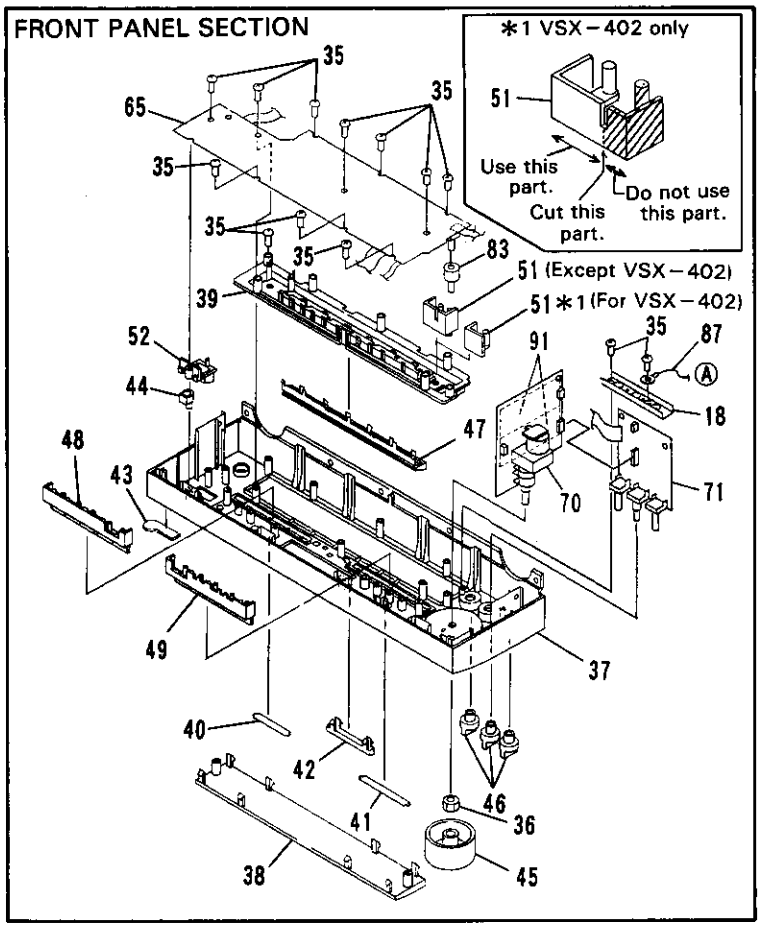

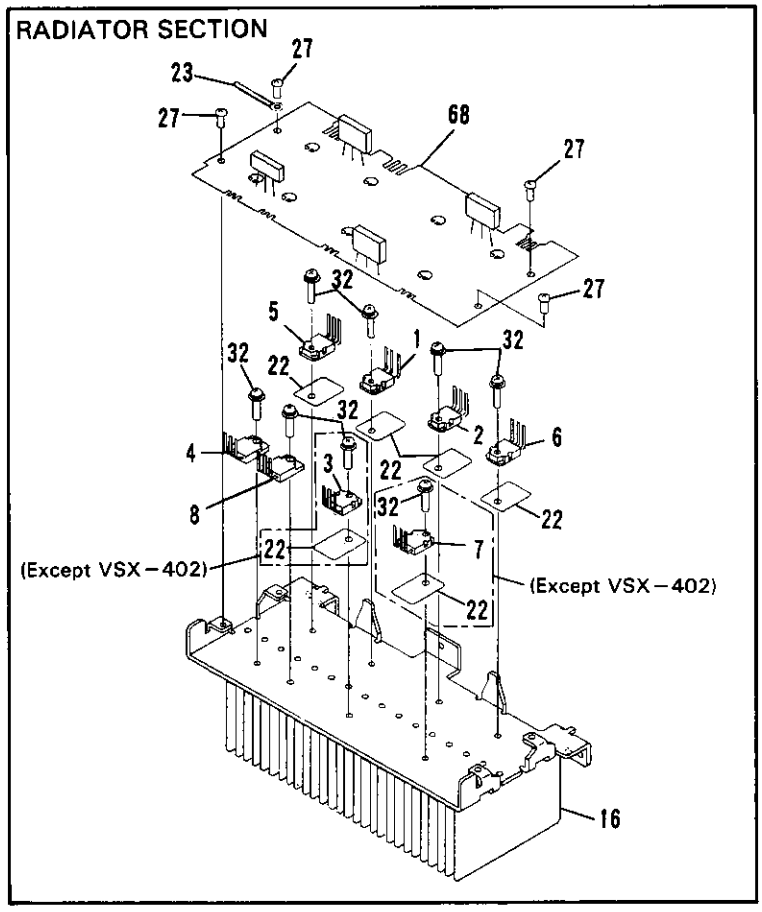

CONTINUED ON SHEET # 1